FAIRCHILD SEMICONDUCTOR®

PN2222

General Purpose Transistor

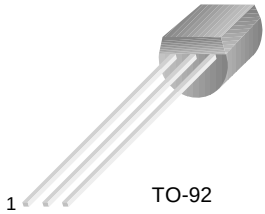

1. Emitter 2. Base 3. Collector

NPN Epitaxial Silicon Transistor

Absolute Maximum Ratings T_a=25°C unless otherwise noted

Symbol	Parameter	Value	Units
V_{CBO}	Collector-Base Voltage	60	V
V_{CEO}	Collector-Emitter Voltage	30	V
V_{EBO}	Emitter-Base Voltage	5	V
I_C	Collector Current	600	mA
P_C	Collector Power Dissipation	625	mW
T_J	Junction Temperature	150	°C
T_{STG}	Storage Temperature	-55 ~ 150	°C

Electrical Characteristics T_a=25°C unless otherwise noted

Symbol	Parameter	Test Condition	Min.	Max.	Units
BV_{CBO}	Collector-Base Breakdown Voltage	I_C=10μA, I_E=0	60		V
BV_{CEO}	Collector Emitter Breakdown Voltage	I_C=10mA, I_B=0	30		V
BV_{EBO}	Emitter-Base Breakdown Voltage	I_E=10μA, I_C=0	5		V
I_{CBO}	Collector Cut-off Current	V_{CB}=50V, I_E=0		0.01	μA
I_{EBO}	Emitter Cut-off Current	V_{EB}=3V, I_C=0		10	nA
h_{FE}	DC Current Gain	V_{CE}=10V, I_C=0.1mA V_{CE}=10V, *I_C=150mA	35 100	 300	
V_{CE} (sat)	* Collector-Emitter Saturation Voltage	I_C=500mA, I_B=50mA		1	V
V_{BE} (sat)	* Base-Emitter Saturation Voltage	I_C=500mA, I_B=50mA		2	V
f_T	Current Gain Bandwidth Product	V_{CE}=20V, I_C=20mA, f=100MHz	300		MHz
C_{ob}	Output Capacitance	V_{CB}=10V, I_E=0, f=1MHz		8	pF

* Pulse Test: Pulse Width≤300μs, Duty Cycle≤2%

©2004 Fairchild Semiconductor Corporation

Package Dimensions

TO-92

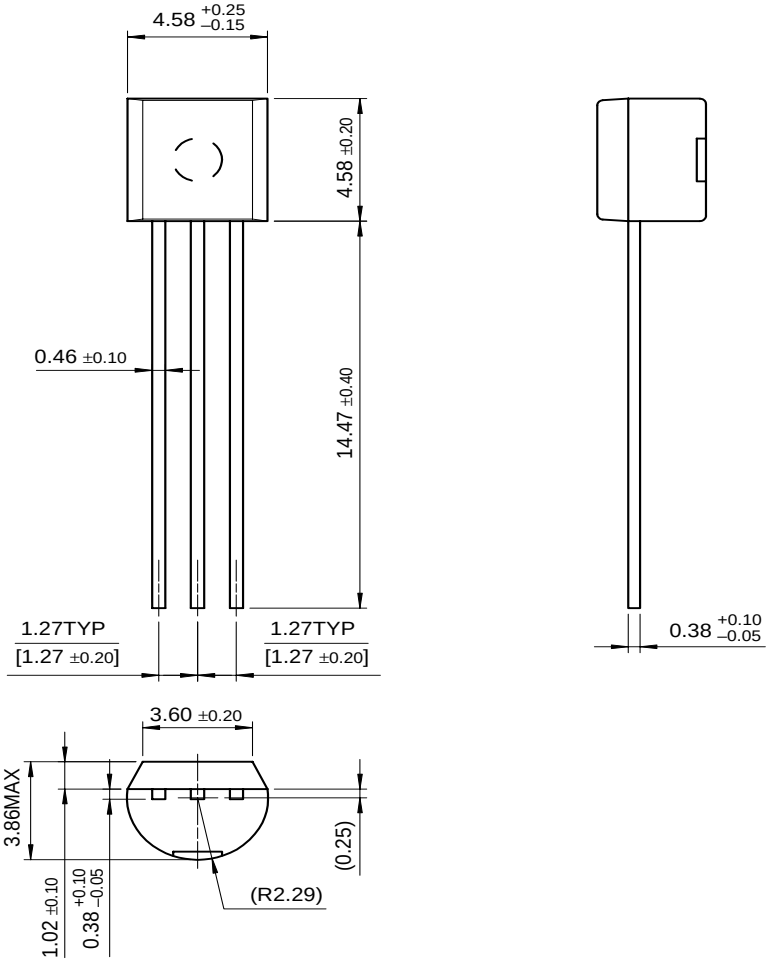

Dimensions in Millimeters

©2002 Fairchild Semiconductor Corporation

TRADEMARKS

The following are registered and unregistered trademarks Fairchild Semiconductor owns or is authorized to use and is not intended to be an exhaustive list of all such trademarks.

ACEx™	FAST®	ISOPLANAR™	Power247™	Stealth™
ActiveArray™	FASTr™	LittleFET™	PowerEdge™	SuperFET™
Bottomless™	FPS™	MICROCOUPLER™	PowerSaver™	SuperSOT™-3
CoolFET™	FRFET™	MicroFET™	PowerTrench®	SuperSOT™-6
CROSSVOLT™	GlobalOptoisolator™	MicroPak™	QFET®	SuperSOT™-8
DOME™	GTO™	MICROWIRE™	QS™	SyncFET™
EcoSPARK™	HiSeC™	MSX™	QT Optoelectronics™	TinyLogic®
E^2CMOS™	I^2C™	MSXPro™	Quiet Series™	TINYOPTO™
EnSigna™	*i-Lo*™	OCX™	RapidConfigure™	TruTranslation™
FACT™	ImpliedDisconnect™	OCXPro™	RapidConnect™	UHC™
FACT Quiet Series™		OPTOLOGIC®	µSerDes™	UltraFET®
Across the board. Around the world.™		OPTOPLANAR™	SILENT SWITCHER®	VCX™
The Power Franchise®		PACMAN™	SMART START™	
Programmable Active Droop™		POP™	SPM™	

DISCLAIMER

FAIRCHILD SEMICONDUCTOR RESERVES THE RIGHT TO MAKE CHANGES WITHOUT FURTHER NOTICE TO ANY PRODUCTS HEREIN TO IMPROVE RELIABILITY, FUNCTION OR DESIGN. FAIRCHILD DOES NOT ASSUME ANY LIABILITY ARISING OUT OF THE APPLICATION OR USE OF ANY PRODUCT OR CIRCUIT DESCRIBED HEREIN; NEITHER DOES IT CONVEY ANY LICENSE UNDER ITS PATENT RIGHTS, NOR THE RIGHTS OF OTHERS.

LIFE SUPPORT POLICY

FAIRCHILD'S PRODUCTS ARE NOT AUTHORIZED FOR USE AS CRITICAL COMPONENTS IN LIFE SUPPORT DEVICES OR SYSTEMS WITHOUT THE EXPRESS WRITTEN APPROVAL OF FAIRCHILD SEMICONDUCTOR CORPORATION.

As used herein:

1. Life support devices or systems are devices or systems which, (a) are intended for surgical implant into the body, or (b) support or sustain life, or (c) whose failure to perform when properly used in accordance with instructions for use provided in the labeling, can be reasonably expected to result in significant injury to the user.

2. A critical component is any component of a life support device or system whose failure to perform can be reasonably expected to cause the failure of the life support device or system, or to affect its safety or effectiveness.

PRODUCT STATUS DEFINITIONS

Definition of Terms

Datasheet Identification	Product Status	Definition
Advance Information	Formative or In Design	This datasheet contains the design specifications for product development. Specifications may change in any manner without notice.
Preliminary	First Production	This datasheet contains preliminary data, and supplementary data will be published at a later date. Fairchild Semiconductor reserves the right to make changes at any time without notice in order to improve design.
No Identification Needed	Full Production	This datasheet contains final specifications. Fairchild Semiconductor reserves the right to make changes at any time without notice in order to improve design.
Obsolete	Not In Production	This datasheet contains specifications on a product that has been discontinued by Fairchild semiconductor. The datasheet is printed for reference information only.

©2004 Fairchild Semiconductor Corporation