International
IOR Rectifier

PD - 94053

IRFZ44N

HEXFET® Power MOSFET

- Advanced Process Technology
- Ultra Low On-Resistance
- Dynamic dv/dt Rating
- 175°C Operating Temperature
- Fast Switching
- Fully Avalanche Rated

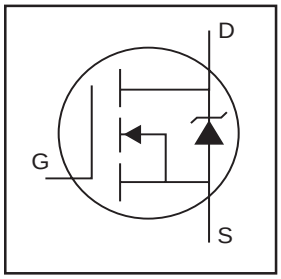

V_{DSS} = 55V

$R_{DS(on)}$ = 17.5mΩ

I_D = 49A

Description

Advanced HEXFET® Power MOSFETs from International Rectifier utilize advanced processing techniques to achieve extremely low on-resistance per silicon area. This benefit, combined with the fast switching speed and ruggedized device design that HEXFET power MOSFETs are well known for, provides the designer with an extremely efficient and reliable device for use in a wide variety of applications.

The TO-220 package is universally preferred for all commercial-industrial applications at power dissipation levels to approximately 50 watts. The low thermal resistance and low package cost of the TO-220 contribute to its wide acceptance throughout the industry.

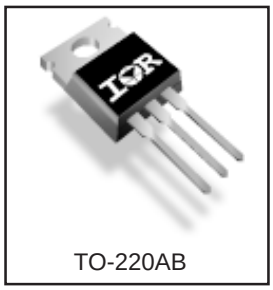

TO-220AB

Absolute Maximum Ratings

	Parameter	Max.	Units
I_D @ T_C = 25°C	Continuous Drain Current, V_{GS} @ 10V	49	A
I_D @ T_C = 100°C	Continuous Drain Current, V_{GS} @ 10V	35	
I_{DM}	Pulsed Drain Current ①	160	
P_D @T_C = 25°C	Power Dissipation	94	W
	Linear Derating Factor	0.63	W/°C
V_{GS}	Gate-to-Source Voltage	± 20	V
I_{AR}	Avalanche Current①	25	A
E_{AR}	Repetitive Avalanche Energy①	9.4	mJ
dv/dt	Peak Diode Recovery dv/dt ③	5.0	V/ns
T_J T_{STG}	Operating Junction and Storage Temperature Range	-55 to + 175	°C
	Soldering Temperature, for 10 seconds	300 (1.6mm from case)	
	Mounting torque, 6-32 or M3 srew	10 lbf•in (1.1N•m)	

Thermal Resistance

	Parameter	Typ.	Max.	Units
$R_{\theta JC}$	Junction-to-Case	——	1.5	°C/W
$R_{\theta CS}$	Case-to-Sink, Flat, Greased Surface	0.50	——	
$R_{\theta JA}$	Junction-to-Ambient	——	62	

01/03/01

Electrical Characteristics @ T_J = 25°C (unless otherwise specified)

	Parameter	Min.	Typ.	Max.	Units	Conditions
$V_{(BR)DSS}$	Drain-to-Source Breakdown Voltage	55	——	——	V	V_{GS} = 0V, I_D = 250µA
$\Delta V_{(BR)DSS}/\Delta T_J$	Breakdown Voltage Temp. Coefficient	——	0.058	——	V/°C	Reference to 25°C, I_D = 1mA
$R_{DS(on)}$	Static Drain-to-Source On-Resistance	——	——	17.5	mΩ	V_{GS} = 10V, I_D = 25A ④
$V_{GS(th)}$	Gate Threshold Voltage	2.0	——	4.0	V	V_{DS} = V_{GS}, I_D = 250µA
g_{fs}	Forward Transconductance	19	——	——	S	V_{DS} = 25V, I_D = 25A④
I_{DSS}	Drain-to-Source Leakage Current	——	——	25	µA	V_{DS} = 55V, V_{GS} = 0V
		——	——	250		V_{DS} = 44V, V_{GS} = 0V, T_J = 150°C
I_{GSS}	Gate-to-Source Forward Leakage	——	——	100	nA	V_{GS} = 20V
	Gate-to-Source Reverse Leakage	——	——	-100		V_{GS} = -20V
Q_g	Total Gate Charge	——	——	63	nC	I_D = 25A
Q_{gs}	Gate-to-Source Charge	——	——	14		V_{DS} = 44V
Q_{gd}	Gate-to-Drain ("Miller") Charge	——	——	23		V_{GS} = 10V, See Fig. 6 and 13
$t_{d(on)}$	Turn-On Delay Time	——	12	——	ns	V_{DD} = 28V
t_r	Rise Time	——	60	——		I_D = 25A
$t_{d(off)}$	Turn-Off Delay Time	——	44	——		R_G = 12Ω
t_f	Fall Time	——	45	——		V_{GS} = 10V, See Fig. 10 ④
L_D	Internal Drain Inductance	——	4.5	——	nH	Between lead, 6mm (0.25in.) from package and center of die contact 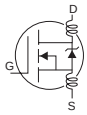
L_S	Internal Source Inductance	——	7.5	——		
C_{iss}	Input Capacitance	——	1470	——	pF	V_{GS} = 0V
C_{oss}	Output Capacitance	——	360	——		V_{DS} = 25V
C_{rss}	Reverse Transfer Capacitance	——	88	——		ƒ = 1.0MHz, See Fig. 5
E_{AS}	Single Pulse Avalanche Energy②	——	530⑤	150⑥	mJ	I_{AS} = 25A, L = 0.47mH

Source-Drain Ratings and Characteristics

	Parameter	Min.	Typ.	Max.	Units	Conditions
I_S	Continuous Source Current (Body Diode)	——	——	49	A	MOSFET symbol showing the integral reverse p-n junction diode. 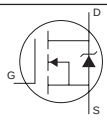
I_{SM}	Pulsed Source Current (Body Diode)①	——	——	160		
V_{SD}	Diode Forward Voltage	——	——	1.3	V	T_J = 25°C, I_S = 25A, V_{GS} = 0V ④
t_{rr}	Reverse Recovery Time	——	63	95	ns	T_J = 25°C, I_F = 25A
Q_{rr}	Reverse Recovery Charge	——	170	260	nC	di/dt = 100A/µs ④
t_{on}	Forward Turn-On Time	Intrinsic turn-on time is negligible (turn-on is dominated by L_S+L_D)				

Notes:

① Repetitive rating; pulse width limited by max. junction temperature. (See fig. 11)

② Starting T_J = 25°C, L = 0.48mH R_G = 25Ω, I_{AS} = 25A. (See Figure 12)

③ $I_{SD} \leq$ 25A, di/dt $\leq$ 230A/µs, $V_{DD} \leq V_{(BR)DSS}$, $T_J \leq$ 175°C

④ Pulse width $\leq$ 400µs; duty cycle $\leq$ 2%.

⑤ This is a typical value at device destruction and represents operation outside rated limits.

⑥ This is a calculated value limited to T_J = 175°C .

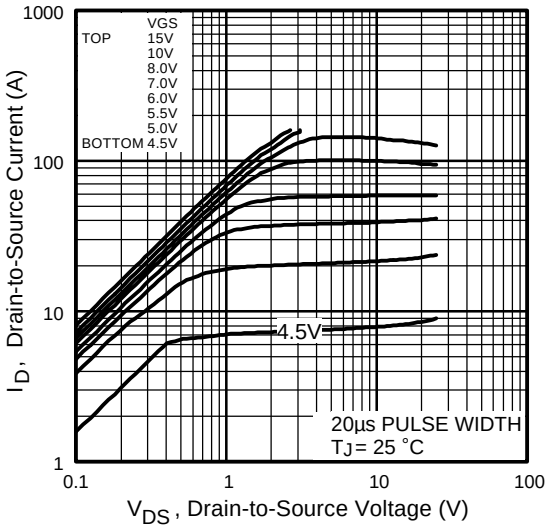

Fig 1. Typical Output Characteristics

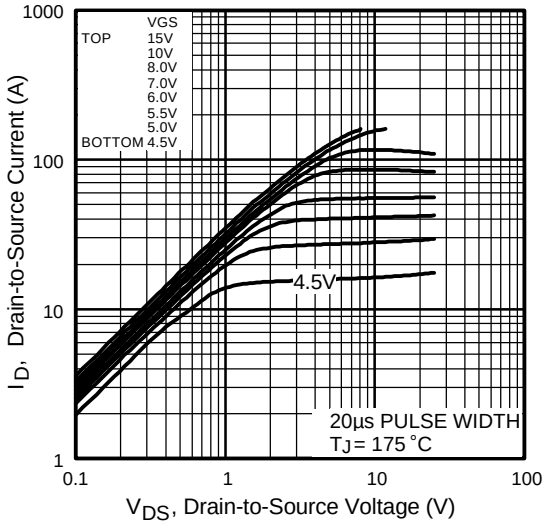

Fig 2. Typical Output Characteristics

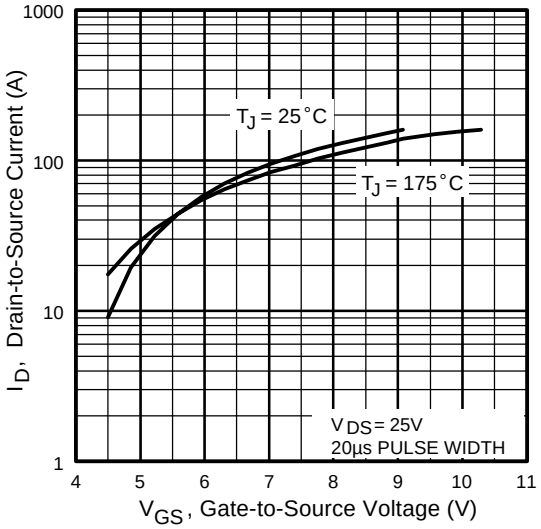

Fig 3. Typical Transfer Characteristics

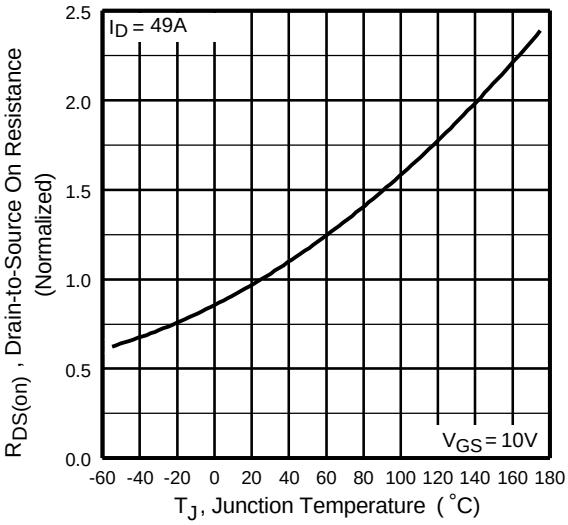

Fig 4. Normalized On-Resistance Vs. Temperature

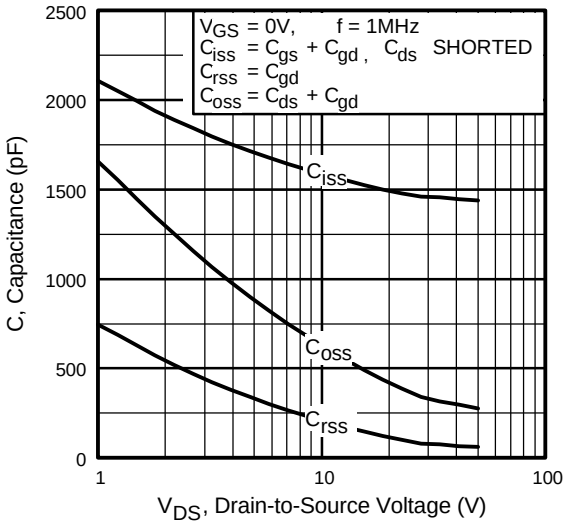

Fig 5. Typical Capacitance Vs. Drain-to-Source Voltage

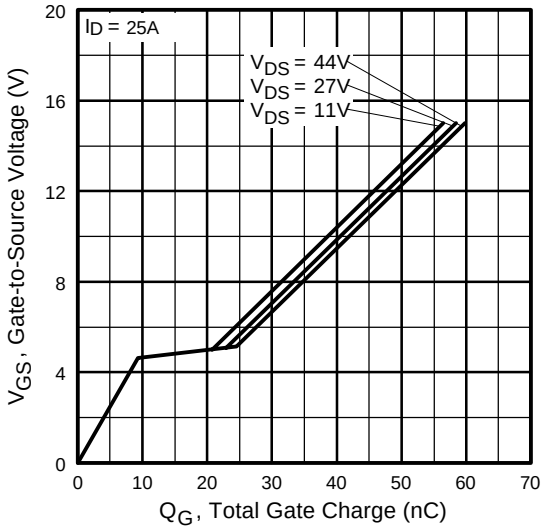

Fig 6. Typical Gate Charge Vs. Gate-to-Source Voltage

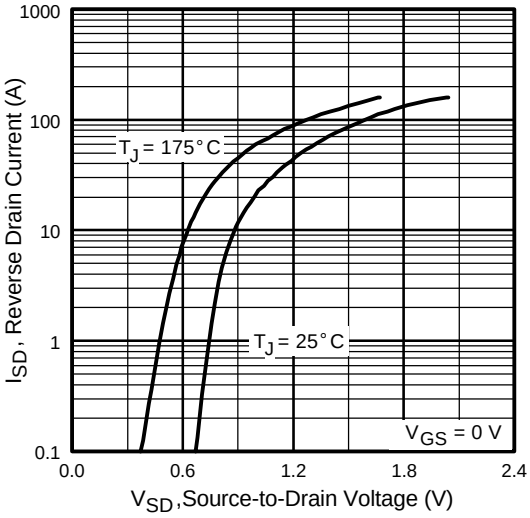

Fig 7. Typical Source-Drain Diode Forward Voltage

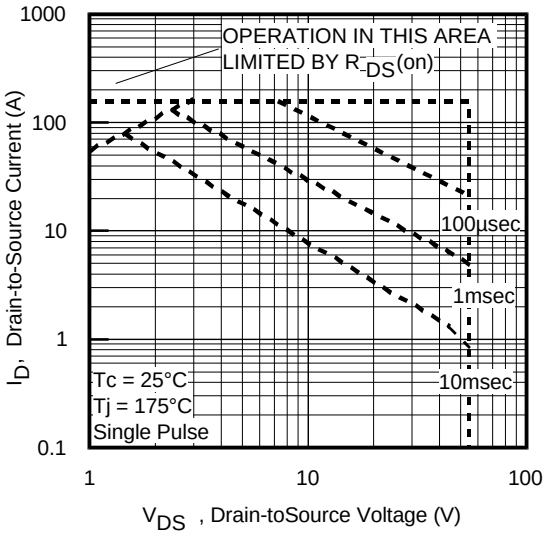

Fig 8. Maximum Safe Operating Area

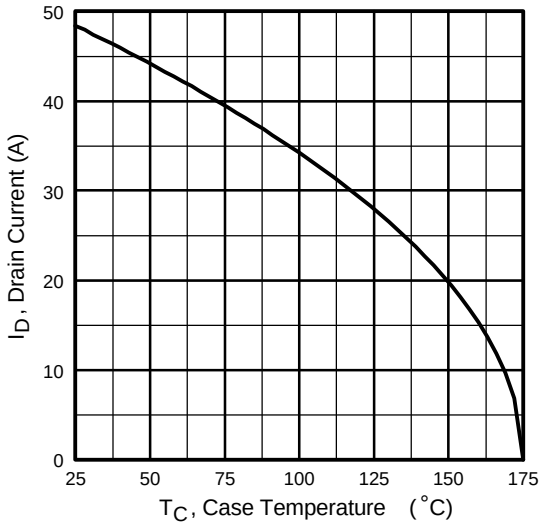

Fig 9. Maximum Drain Current Vs. Case Temperature

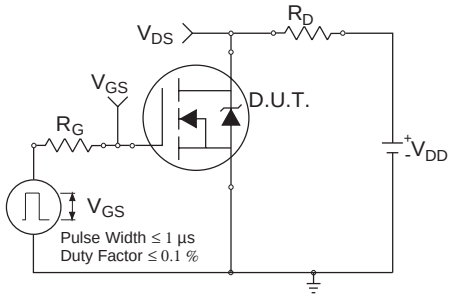

Fig 10a. Switching Time Test Circuit

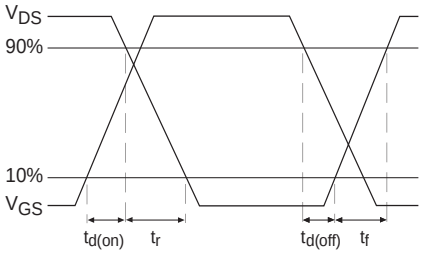

Fig 10b. Switching Time Waveforms

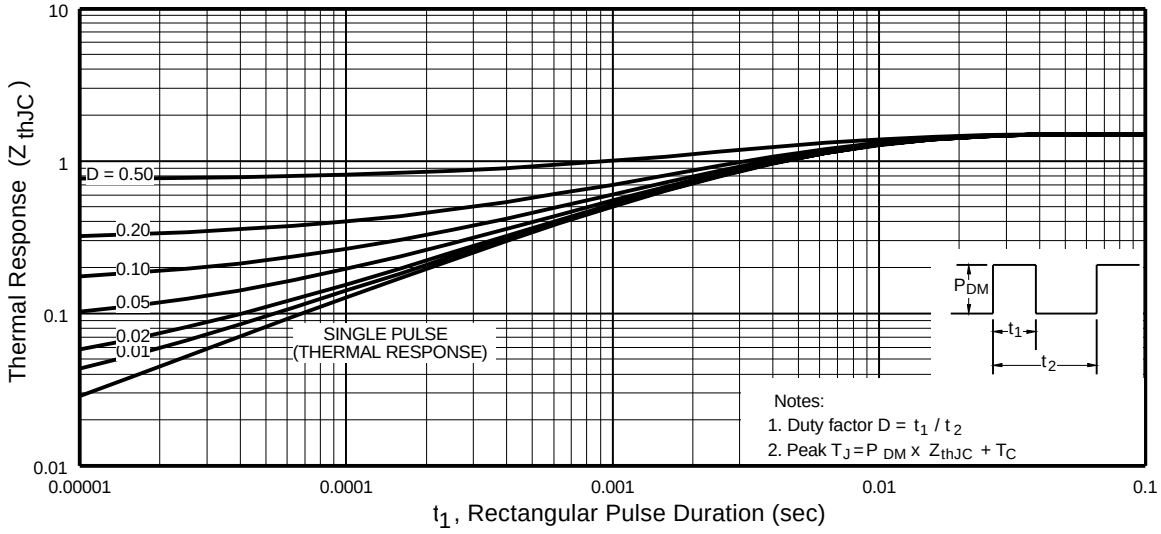

Fig 11. Maximum Effective Transient Thermal Impedance, Junction-to-Case

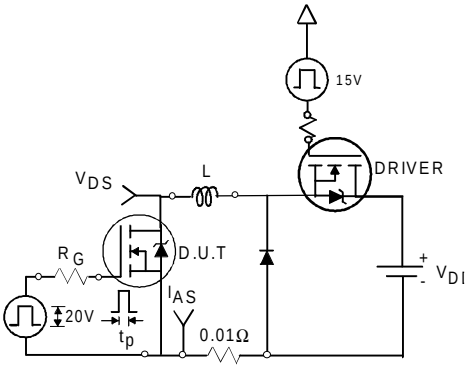

Fig 12a. Unclamped Inductive Test Circuit

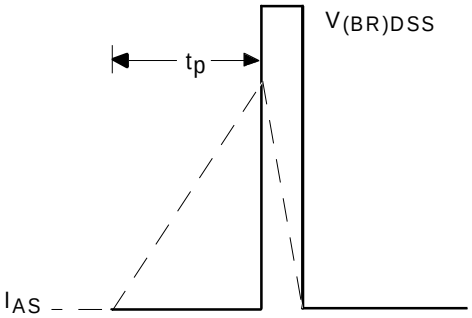

Fig 12b. Unclamped Inductive Waveforms

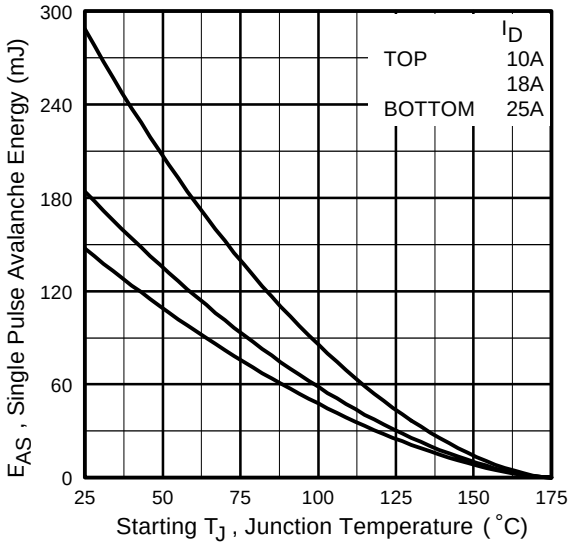

Fig 12c. Maximum Avalanche Energy Vs. Drain Current

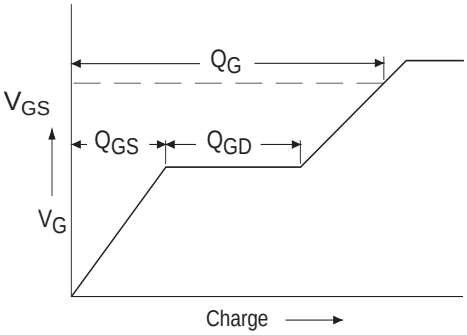

Fig 13a. Basic Gate Charge Waveform

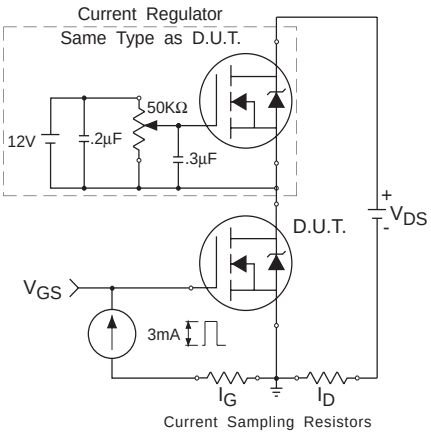

Fig 13b. Gate Charge Test Circuit

Peak Diode Recovery dv/dt Test Circuit

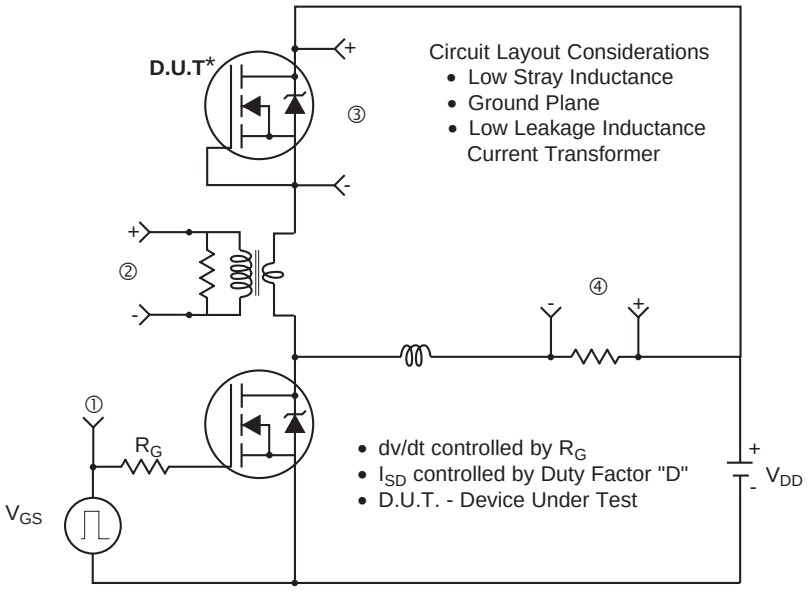

* Reverse Polarity of D.U.T for P-Channel

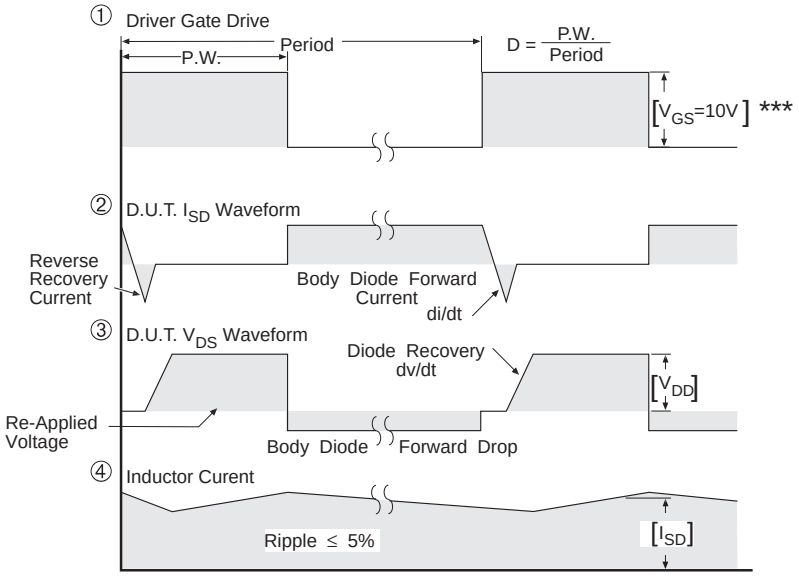

*** V_{GS} = 5.0V for Logic Level and 3V Drive Devices

Fig 14. For N-channel HEXFET® power MOSFETs

International
IOR Rectifier

Package Outline

TO-220AB

Dimensions are shown in millimeters (inches)

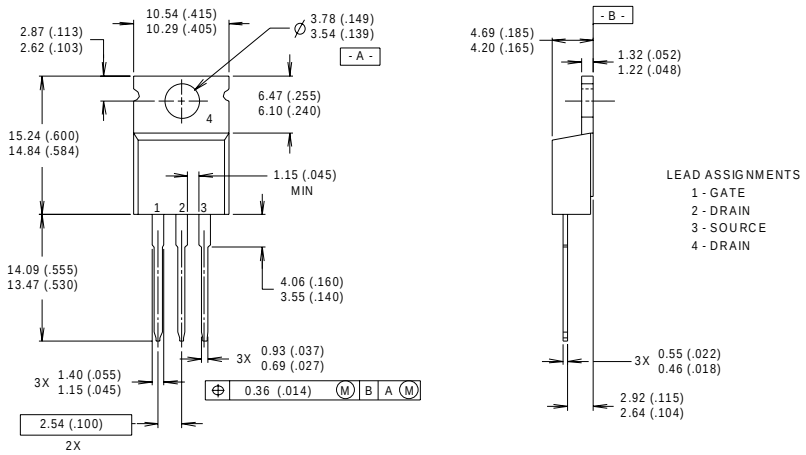

NOTES:

1 DIMENSIONING & TOLERANCING PER ANSI Y14.5M, 1982.
2 CONTROLLING DIMENSION : INCH
3 OUTLINE CONFORMS TO JEDEC OUTLINE TO-220AB.
4 HEATSINK & LEAD MEASUREMENTS DO NOT INCLUDE BURRS.

Part Marking Information

TO-220AB

EXAMPLE : THIS IS AN IRF1010
WITH ASSEMBLY
LOT CODE 9B1M

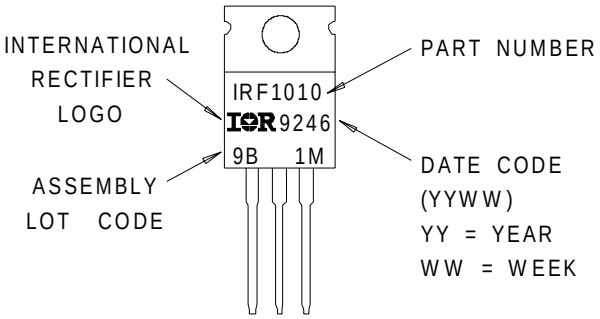

Data and specifications subject to change without notice.
This product has been designed and qualified for the Automotive [Q101] market.
Qualification Standards can be found on IR's Web site.

International
IOR Rectifier

IR WORLD HEADQUARTERS: 233 Kansas St., El Segundo, California 90245, USA Tel: (310) 252-7105
TAC Fax: (310) 252-7903
Visit us at www.irf.com for sales contact information.01/01