IRFP450

N-CHANNEL 500V - 0.31Ω - 14A TO-247
PowerMesh™II MOSFET

TYPE	V_{DSS}	$R_{DS(on)}$	I_D
IRFP450	500V	< 0.38Ω	14 A

- TYPICAL R_{DS}(on) = 0.31Ω
- EXTREMELY HIGH dv/dt CAPABILITY
- 100% AVALANCHE TESTED
- NEW HIGH VOLTAGE BENCHMARK
- GATE CHARGE MINIMIZED

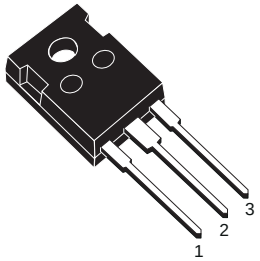

TO-247

DESCRIPTION

The PowerMESH™II is the evolution of the first generation of MESH OVERLAY™. The layout refinements introduced greatly improve the Ron*area figure of merit while keeping the device at the leading edge for what concerns switching speed, gate charge and ruggedness.

APPLICATIONS

- SWITCH MODE POWER SUPPLIES (SMPS)
- HIGH CURRENT, HIGH SPEED SWITCHING
- DC-AC CONVERTERS FOR WELDING EQUIPMENT AND UNINTERRUPTIBLE POWER SUPPLIES AND MOTOR DRIVE

INTERNAL SCHEMATIC DIAGRAM

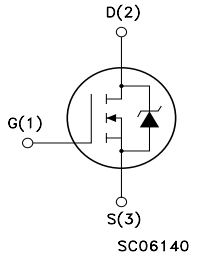

ABSOLUTE MAXIMUM RATINGS

Symbol	Parameter	Value	Unit
V_{DS}	Drain-source Voltage (V_{GS} = 0)	500	V
V_{DGR}	Drain-gate Voltage (R_{GS} = 20 kΩ)	500	V
V_{GS}	Gate- source Voltage	±30	V
I_D	Drain Current (continuos) at T_C = 25°C	14	A
I_D	Drain Current (continuos) at T_C = 100°C	8.7	A
I_{DM} (●)	Drain Current (pulsed)	56	A
P_{TOT}	Total Dissipation at T_C = 25°C	190	W
	Derating Factor	1.5	W/°C
dv/dt(1)	Peak Diode Recovery voltage slope	3.5	V/ns
T_{stg}	Storage Temperature	–65 to 150	°C
T_j	Max. Operating Junction Temperature	150	°C

(•)Pulse width limited by safe operating area

(1)I_{SD} ≤14A, di/dt ≤100A/µs, V_{DD} ≤ $V_{(BR)DSS}$, T_j ≤ T_{JMAX}.

THERMAL DATA

Rthj-case	Thermal Resistance Junction-case Max	0.66	°C/W
Rthj-amb	Thermal Resistance Junction-ambient Max	30	°C/W
T_l	Maximum Lead Temperature For Soldering Purpose	300	°C

AVALANCHE CHARACTERISTICS

Symbol	Parameter	Max Value	Unit
I_{AR}	Avalanche Current, Repetitive or Not-Repetitive (pulse width limited by T_j max)	14	A
E_{AS}	Single Pulse Avalanche Energy (starting T_j = 25 °C, I_D = I_{AR}, V_{DD} = 50 V)	800	mJ

ELECTRICAL CHARACTERISTICS (TCASE = 25 °C UNLESS OTHERWISE SPECIFIED)

OFF

Symbol	Parameter	Test Conditions	Min.	Typ.	Max.	Unit
$V_{(BR)DSS}$	Drain-source Breakdown Voltage	I_D = 250 µA, V_{GS} = 0	500			V
I_{DSS}	Zero Gate Voltage Drain Current (V_{GS} = 0)	V_{DS} = Max Rating V_{DS} = Max Rating, T_C = 125 °C			1 50	µA µA
I_{GSS}	Gate-body Leakage Current (V_{DS} = 0)	V_{GS} = ±30V			±100	nA

ON (1)

Symbol	Parameter	Test Conditions	Min.	Typ.	Max.	Unit
$V_{GS(th)}$	Gate Threshold Voltage	V_{DS} = V_{GS}, I_D = 250 µA	2	3	4	V
$R_{DS(on)}$	Static Drain-source On Resistance	V_{GS} = 10V, I_D = 7A		0.31	0.38	Ω

DYNAMIC

Symbol	Parameter	Test Conditions	Min.	Typ.	Max.	Unit
g_{fs}	Forward Transconductance	V_{DS} > $I_{D(on)}$ x $R_{DS(on)max}$, I_D =7A		13		S
C_{iss}	Input Capacitance	V_{DS} = 25V, f = 1 MHz, V_{GS} = 0		2000		pF
C_{oss}	Output Capacitance			300		pF
C_{rss}	Reverse Transfer Capacitance			43		pF

ELECTRICAL CHARACTERISTICS (CONTINUED)

SWITCHING ON

Symbol	Parameter	Test Conditions	Min.	Typ.	Max.	Unit
$t_{d(on)}$	Turn-on Delay Time	V_{DD} = 250V, I_D = 7 A R_G = 4.7Ω, V_{GS} = 10V (see test circuit, Figure 3)		20		ns
t_r	Rise Time			23		ns
Q_g	Total Gate Charge	V_{DD} = 400V, I_D = 14 A, V_{GS} = 10V, R_G = 4.7Ω		75	90	nC
Q_{gs}	Gate-Source Charge			10		nC
Q_{gd}	Gate-Drain Charge			38		nC

SWITCHING OFF

Symbol	Parameter	Test Conditions	Min.	Typ.	Max.	Unit
$t_{r(Voff)}$	Off-voltage Rise Time	V_{DD} = 400V, I_D = 14 A, R_G = 4.7Ω, V_{GS} = 10V (see test circuit, Figure 5)		25		ns
t_f	Fall Time			30		ns
t_c	Cross-over Time			62		ns

SOURCE DRAIN DIODE

Symbol	Parameter	Test Conditions	Min.	Typ.	Max.	Unit
I_{SD}	Source-drain Current				14	A
I_{SDM} (2)	Source-drain Current (pulsed)				56	A
V_{SD} (1)	Forward On Voltage	I_{SD} = 14 A, V_{GS} = 0			1.6	V
t_{rr}	Reverse Recovery Time	I_{SD} = 14 A, di/dt = 100A/µs, V_{DD} = 100V, T_j = 150°C (see test circuit, Figure 5)		670		ns
Q_{rr}	Reverse Recovery Charge			6.7		µC
I_{RRM}	Reverse Recovery Current			20		A

Note: 1. Pulsed: Pulse duration = 300 µs, duty cycle 1.5 %.
2. Pulse width limited by safe operating area.

Safe Operating Area

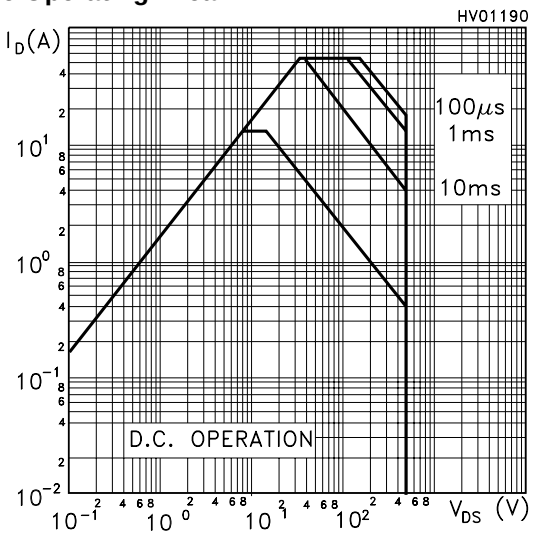

Thermal Impedance

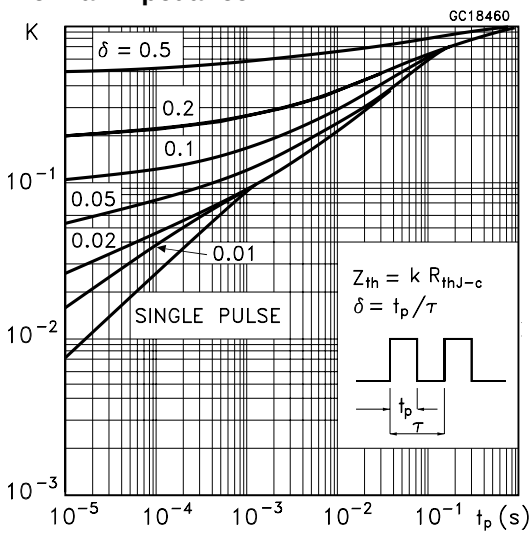

Output Characteristics

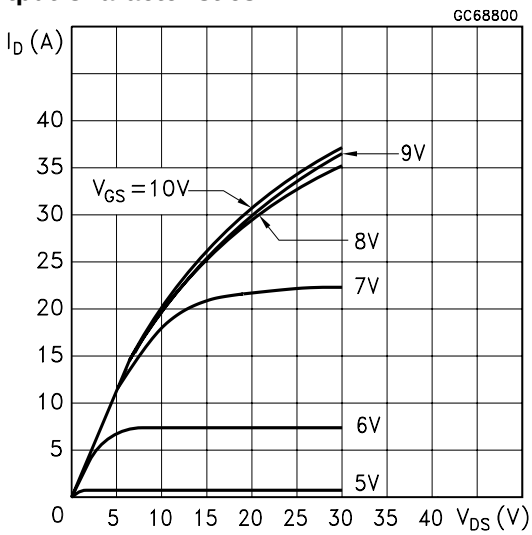

Transfer Characteristics

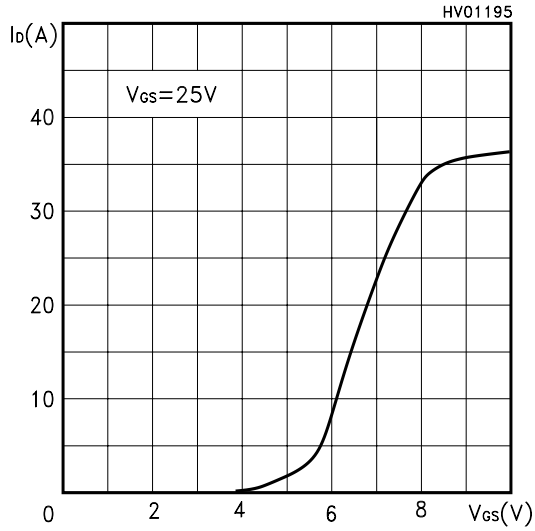

Transconductance

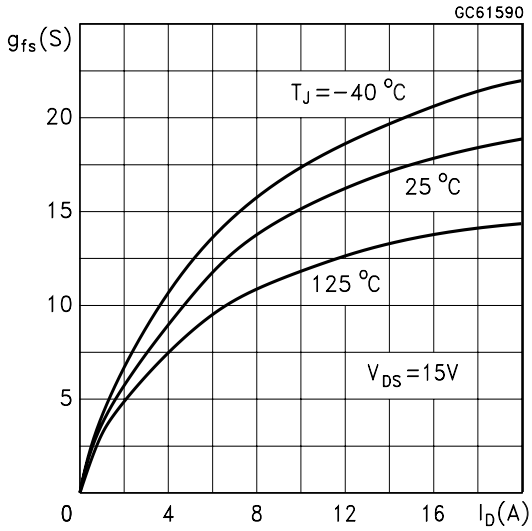

Static Drain-source On Resistance

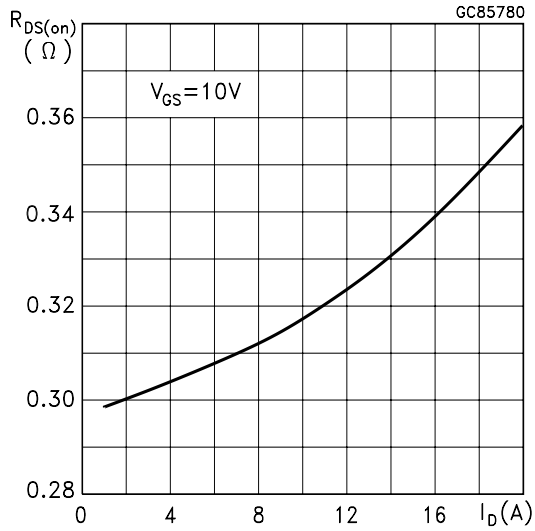

Gate Charge vs Gate-source Voltage

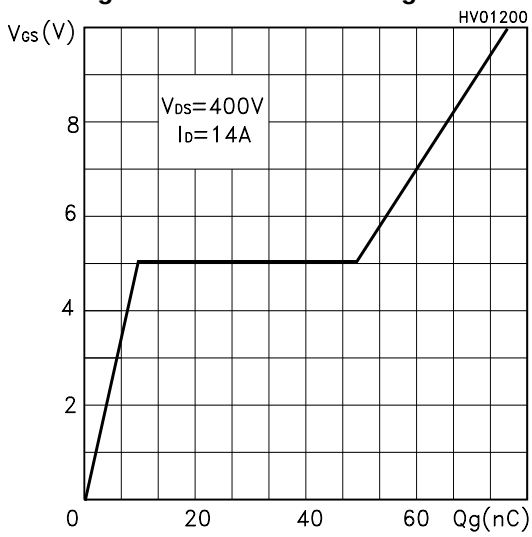

Capacitance Variations

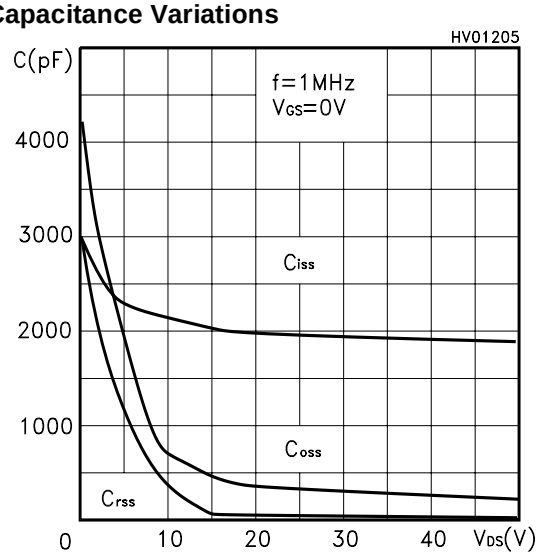

Normalized Gate Thereshold Voltage vs Temp.

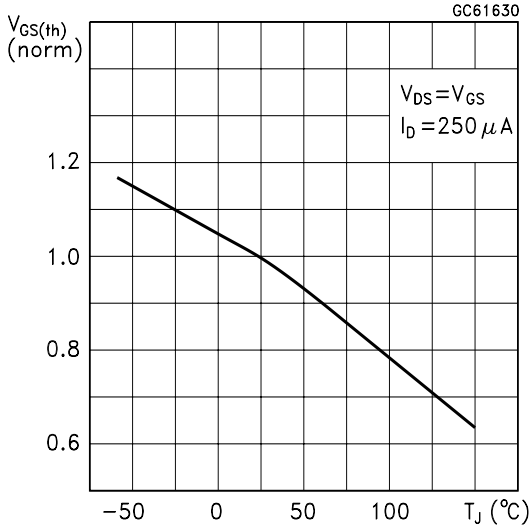

Normalized On Resistance vs Temperature

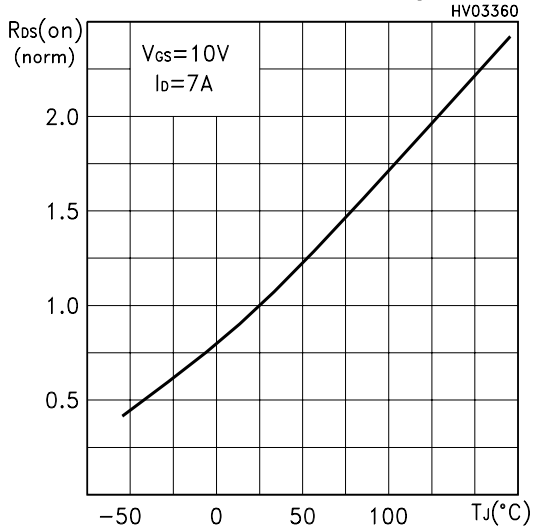

Source-drain Diode Forward Characteristics

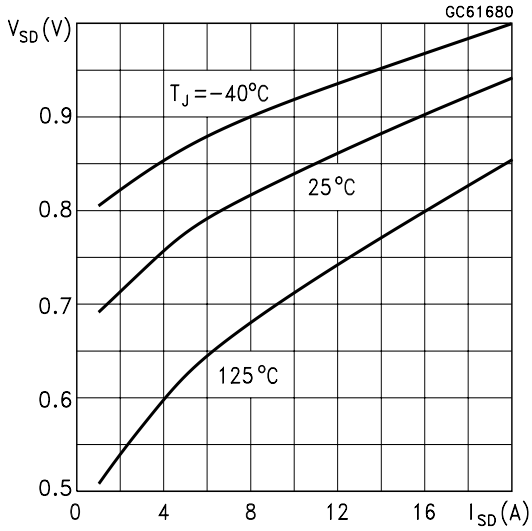

Fig. 1: Unclamped Inductive Load Test Circuit

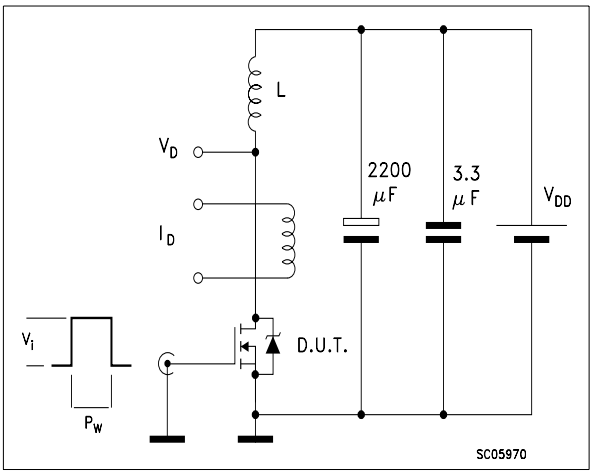

Fig. 2: Unclamped Inductive Waveform

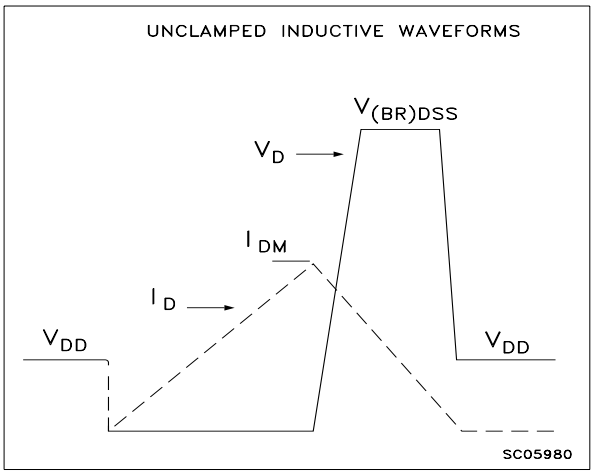

Fig. 3: Switching Times Test Circuit For Resistive Load

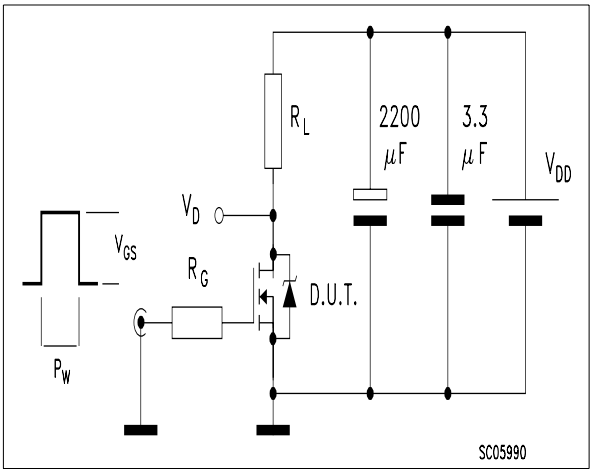

Fig. 4: Gate Charge test Circuit

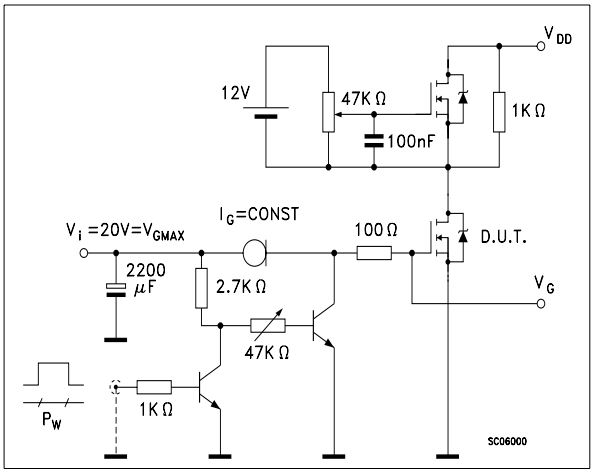

Fig. 5: Test Circuit For Inductive Load Switching And Diode Recovery Times

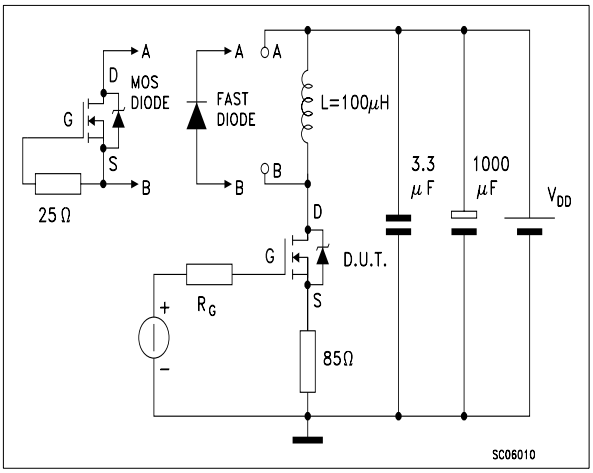

TO-247 MECHANICAL DATA

DIM.	mm.			inch		
	MIN.	TYP	MAX.	MIN.	TYP.	MAX.
A	4.85		5.15	0.19		0.20
D	2.20		2.60	0.08		0.10
E	0.40		0.80	0.015		0.03
F	1		1.40	0.04		0.05
F1		3			0.11	
F2		2			0.07	
F3	2		2.40	0.07		0.09
F4	3		3.40	0.11		0.13
G		10.90			0.43	
H	15.45		15.75	0.60		0.62
L	19.85		20.15	0.78		0.79
L1	3.70		4.30	0.14		0.17
L2		18.50			0.72	
L3	14.20		14.80	0.56		0.58
L4		34.60			1.36	
L5		5.50			0.21	
M	2		3	0.07		0.11
V		5º			5º	
V2		60º			60º	
Dia	3.55		3.65	0.14		0.143

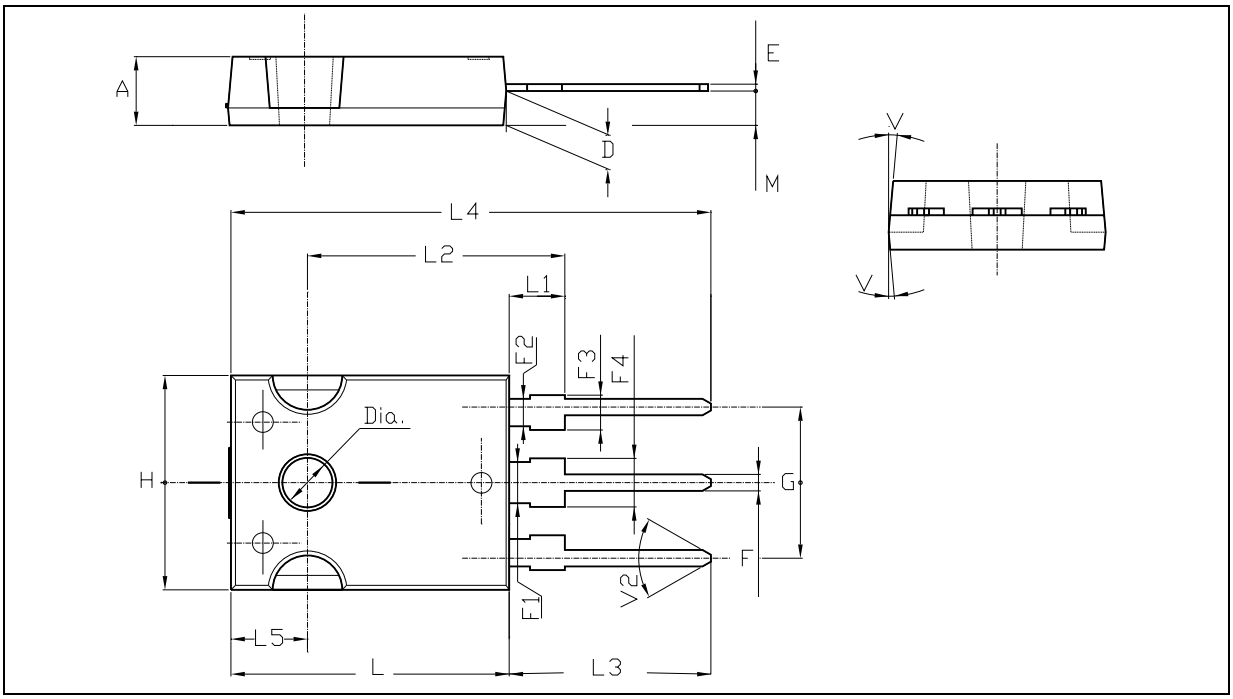

Information furnished is believed to be accurate and reliable. However, STMicroelectronics assumes no responsibility for the consequences of use of such information nor for any infringement of patents or other rights of third parties which may result from its use. No license is granted by implication or otherwise under any patent or patent rights of STMicroelectronics. Specification mentioned in this publication are subject to change without notice. This publication supersedes and replaces all information previously supplied. STMicroelectronics products are not authorized for use as critical components in life support devices or systems without express written approval of STMicroelectronics.

The ST logo is a trademark of STMicroelectronics

© 2000 STMicroelectronics – Printed in Italy – All Rights Reserved

STMicroelectronics GROUP OF COMPANIES

Australia - Brazil - China - Finland - France - Germany - Hong Kong - India - Italy - Japan - Malaysia - Malta - Morocco - Singapore - Spain - Sweden - Switzerland - United Kingdom - U.S.A.

http://www.st.com