2N2905A
2N2907A

SMALL SIGNAL PNP TRANSISTORS

DESCRIPTION

The 2N2905A and 2N2907A are silicon Planar Epitaxial PNP transistors in Jedec TO-39 (for 2N2905A) and in Jedec TO-18 (for 2N2907A) metal case. They are designed for high speed saturated switching and general purpose applications.

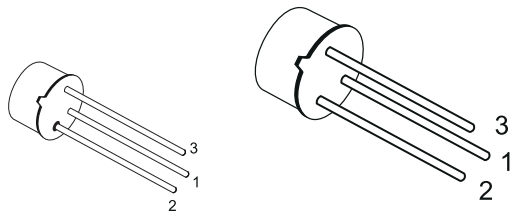

TO-18 **TO-39**

INTERNAL SCHEMATIC DIAGRAM

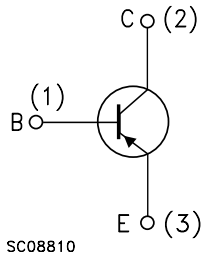

ABSOLUTE MAXIMUM RATINGS

Symbol	Parameter	Value	Unit
V_{CBO}	Collector-Base Voltage (I_E = 0)	-60	V
V_{CEO}	Collector-Emitter Voltage (I_B = 0)	-60	V
V_{EBO}	Emitter-Base Voltage (I_C = 0)	-5	V
I_C	Collector Current	-0.6	A
I_{CM}	Collector Peak Current (t_p < 5 ms)	-0.8	A
P_{tot}	Total Dissipation at $T_{amb} \leq 25\ ^oC$		
	for **2N2905A**	0.6	W
	for **2N2907A**	0.4	W
	at $T_C \leq 25\ ^oC$		
	for **2N2905A**	3	W
	for **2N2907A**	1.8	W
T_{stg}	Storage Temperature	-65 to 175	^oC
T_j	Max. Operating Junction Temperature	175	^oC

THERMAL DATA

		TO-39	TO-18	
$R_{thj-case}$	Thermal Resistance Junction-Case Max	50	83.3	$^oC/W$
$R_{thj-amb}$	Thermal Resistance Junction-Ambient Max	250	375	$^oC/W$

ELECTRICAL CHARACTERISTICS (T_{case} = 25 ^oC unless otherwise specified)

Symbol	Parameter	Test Conditions	Min.	Typ.	Max.	Unit
I_{CBO}	Collector Cut-off Current (I_E = 0)	V_{CB} = -50 V V_{CB} = -50 V T_j = 150 ^oC			-10 -10	nA µA
I_{CEX}	Collector Cut-off Current (V_{BE} = 0.5V)	V_{CE} = -30 V			-50	nA
I_{BEX}	Base Cut-off Current (V_{BE} = 0.5V)	V_{CE} = -30 V			-50	nA
$V_{(BR)CBO}$	Collector-Base Breakdown Voltage (I_E = 0)	I_C = -10 µA	-60			V
$V_{(BR)CEO}$*	Collector-Emitter Breakdown Voltage (I_B = 0)	I_C = -10 mA	-60			V
$V_{(BR)EBO}$	Emitter-Base Breakdown Voltage (I_C = 0)	I_E = -10 µA	-5			V
$V_{CE(sat)}$*	Collector-Emitter Saturation Voltage	I_C = -150 mA I_B = -15 mA I_C = -500 mA I_B = -50 mA			-0.4 -1.6	V V
$V_{BE(sat)}$*	Base-Emitter Saturation Voltage	I_C = -150 mA I_B = -15 mA I_C = -500 mA I_B = -50 mA			-1.3 -2.6	V V
h_{FE}*	DC Current Gain	I_C = -0.1 mA V_{CE} = -10 V I_C = -1 mA V_{CE} = -10 V I_C = -10 mA V_{CE} = -10 V I_C = -150 mA V_{CE} = -10 V I_C = -500 mA V_{CE} = -10 V	75 100 100 100 50		 300	
f_T	Transition Frequency	V_{CE} = -20 V f = 100 MHz I_C = -50 mA	200			MHz
C_{EBO}	Emitter-Base Capacitance	I_C = 0 V_{EB} = -2 V f = 1MHz			30	pF
C_{CBO}	Collector-Base Capacitance	I_E = 0 V_{CB} = -10 V f = 1MHz			8	pF
t_d**	Delay Time	V_{CC} = -30 V I_C = -150 mA I_{B1} = -15 mA			10	ns
t_r**	Rise Time	V_{CC} = -30 V I_C = -150 mA I_{B1} = -15 mA			40	ns
t_s**	Storage Time	V_{CC} = -6 V I_C = -150 mA I_{B1} = -I_{B2} = -15 mA			80	ns
t_f**	Fall Time	V_{CC} = -6 V I_C = -150 mA I_{B1} = -I_{B2} = -15 mA			30	ns
t_{on}**	Turn-on Time	V_{CC} = -30 V I_C = -150 mA I_{B1} = -15 mA			45	ns
t_{off}**	Turn-off Time	V_{CC} = -6 V I_C = -150 mA I_{B1} = -I_{B2} = -15 mA			100	ns

* Pulsed: Pulse duration = 300 µs, duty cycle ≤ 1 %
** See test circuit

Normalized DC Current Gain.

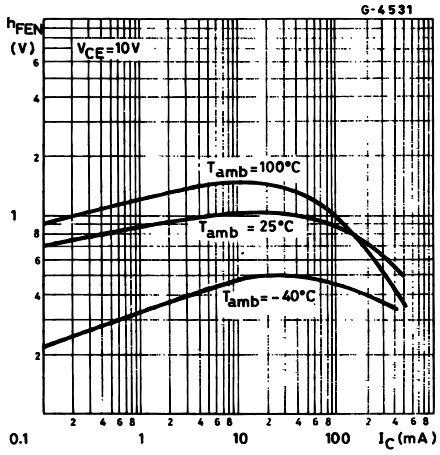

Collector Emitter Saturation Voltage.

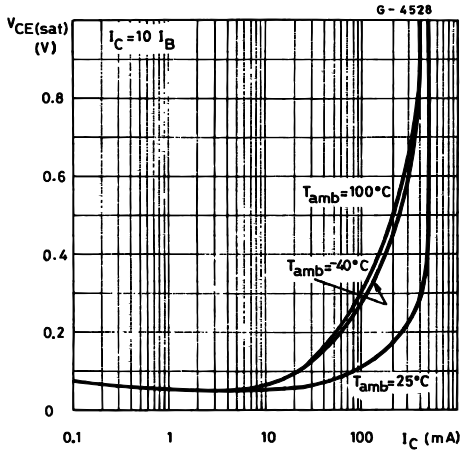

Collector Base and Emitter-base capacitances.

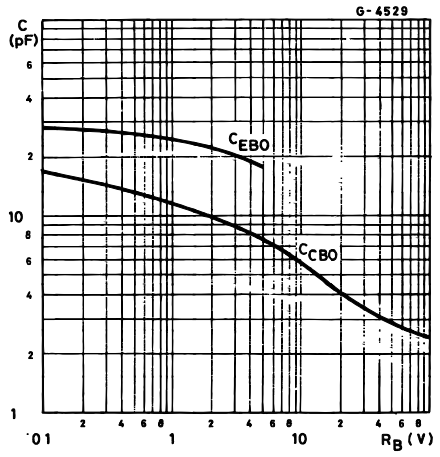

Switching Characteristics.

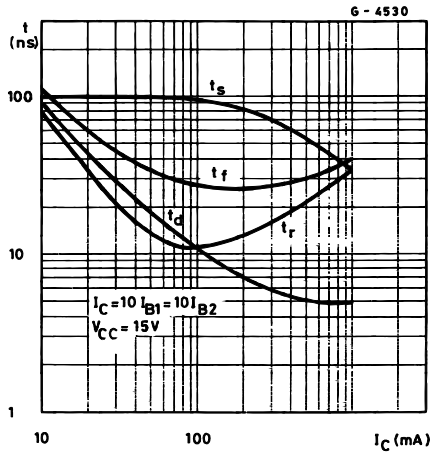

Test Circuit for t_{on}, t_r, t_d.

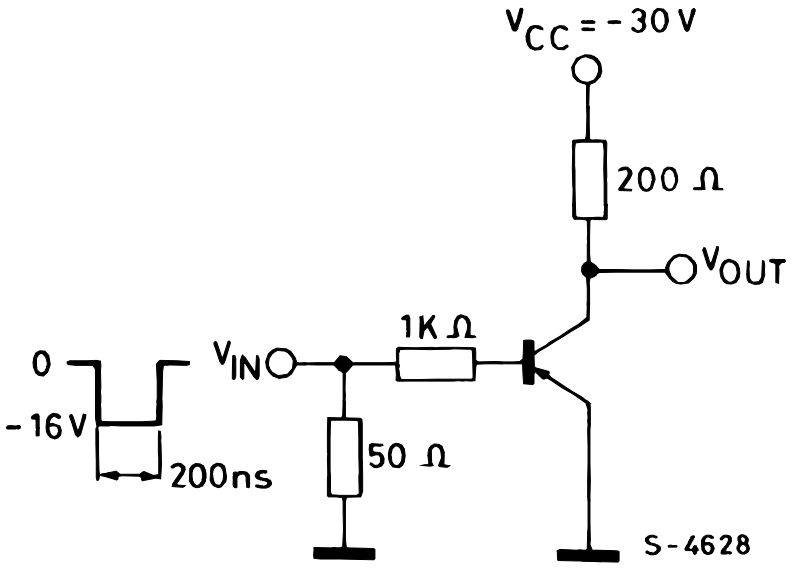

PULSE GENERATOR :
$t_r \leq 2.0$ ms
Frequency = 150 Hz
$Z_o = 50\ \Omega$

TO OSCILLOSCOPE :
$t_r < 5.0$ ns
$Z_{IN} > 10\ M\Omega$

Test Circuit for t_{off}, t_o, t_f.

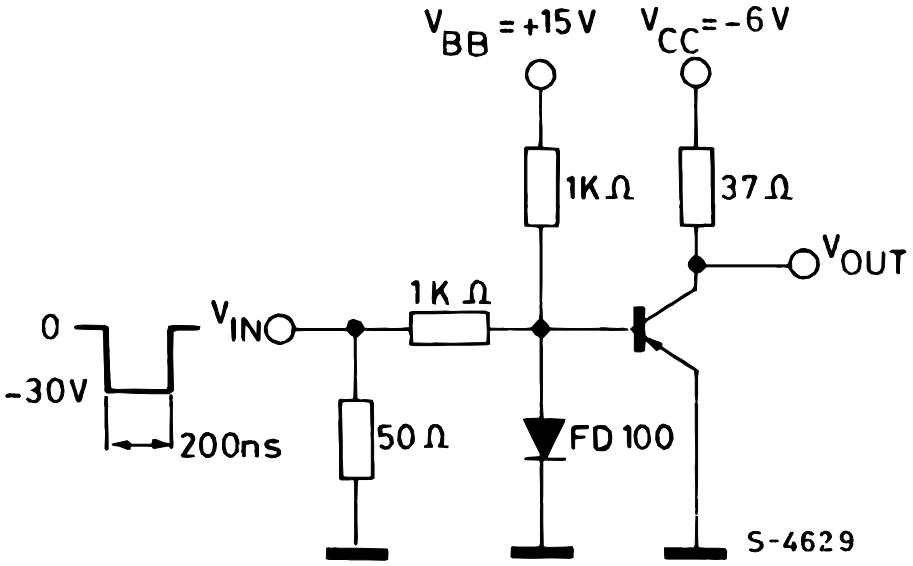

PULSE GENERATOR :
$t_r \leq 2.0$ ns
Frequency = 150 Hz
$Z_o = 50\ \Omega$

TO OSCILLOSCOPE :
$t_r < 5.0$ ns
$Z_{IN} > 100\ M\Omega$

TO-18 MECHANICAL DATA

DIM.	mm			inch		
	MIN.	TYP.	MAX.	MIN.	TYP.	MAX.
A		12.7			0.500	
B			0.49			0.019
D			5.3			0.208
E			4.9			0.193
F			5.8			0.228
G	2.54			0.100		
H			1.2			0.047
I			1.16			0.045
L	45°			45°		

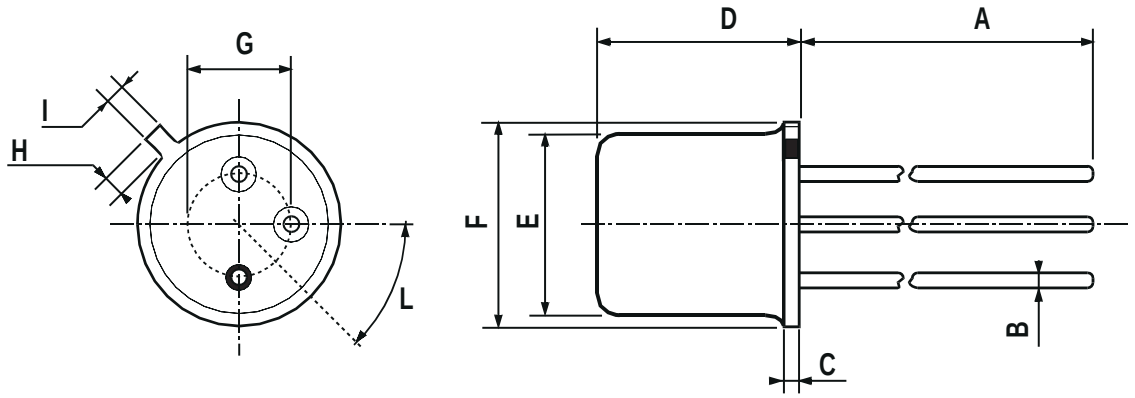

0016043

TO-39 MECHANICAL DATA

DIM.	mm			inch		
	MIN.	TYP.	MAX.	MIN.	TYP.	MAX.
A	12.7			0.500		
B			0.49			0.019
D			6.6			0.260
E			8.5			0.334
F			9.4			0.370
G	5.08			0.200		
H			1.2			0.047
I			0.9			0.035
L	45° (typ.)					

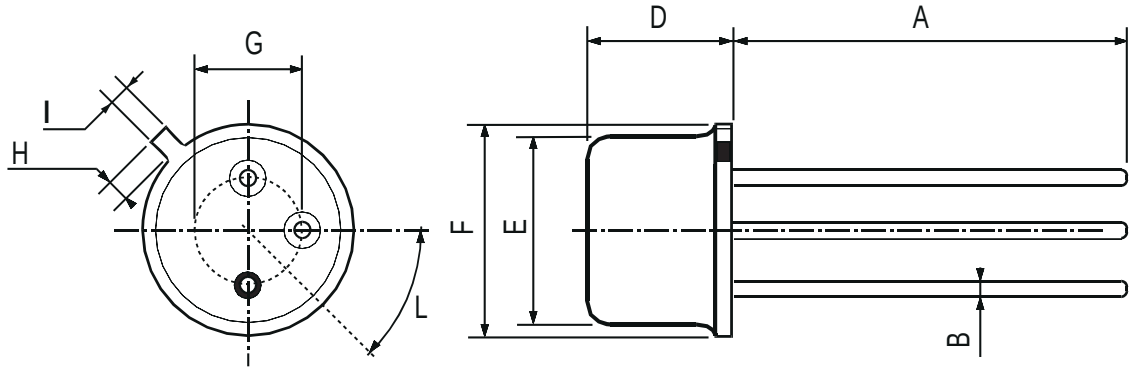

P008B

Information furnished is believed to be accurate and reliable. However, STMicroelectronics assumes no responsibility for the consequences of use of such information nor for any infringement of patents or other rights of third parties which may result from its use. No license is granted by implication or otherwise under any patent or patent rights of STMicroelectronics. Specification mentioned in this publication are subject to change without notice. This publication supersedes and replaces all information previously supplied. STMicroelectronics products are not authorized for use as critical components in life support devices or systems without express written approval of STMicroelectronics.

The ST logo is a trademark of STMicroelectronics

© 2003 STMicroelectronics – Printed in Italy – All Rights Reserved

STMicroelectronics GROUP OF COMPANIES

Australia - Brazil - Canada - China - Finland - France - Germany - Hong Kong - India - Israel - Italy - Japan - Malaysia - Malta - Morocco - Singapore - Spain - Sweden - Switzerland - United Kingdom - United States.

http://www.st.com