LED LAMPS SPECIFICATION

Part No. : MT-1W10UB/W60/465-5/ES

Package Dimensions

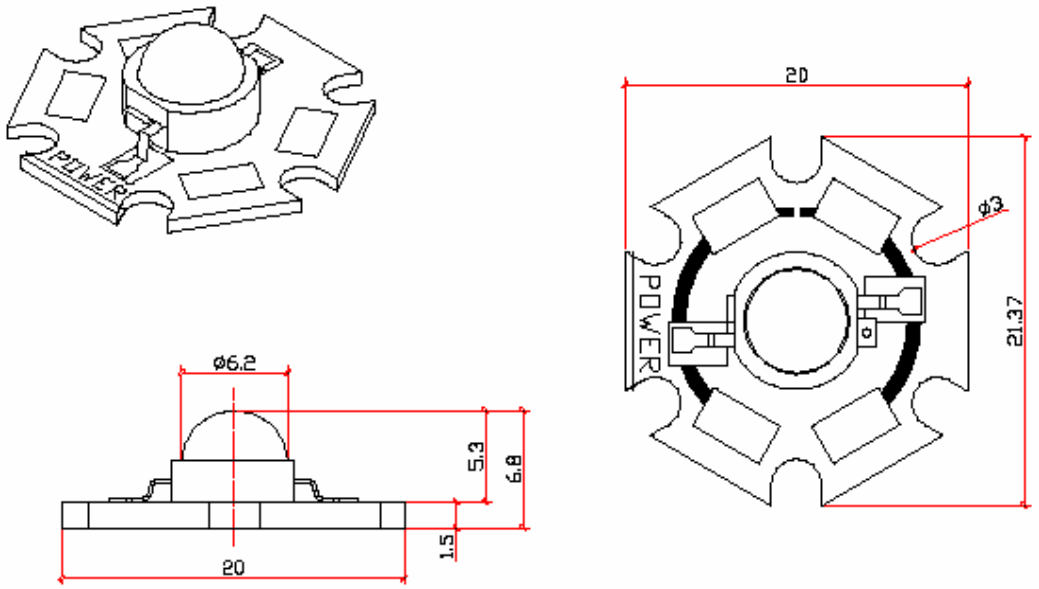

Features

1. Ultra Luminance
2. High Forward Current Operation: 350mA
3. High Thermal Conductivity

Application

1. Decorative and entertainment illumination
2. Signal & Symbol Luminaries
3. Exterior & Interior Automative illumination

Notes

1. All Dimensions are in millimeters
2. Tolerance is +/- 0.25mm unless otherwise noted
3. Protruded resin under flange is 1.0mm max.
4. Lead measured where the leads emerge from the package
5. ESD Class based on Human Body Mode : 1000V (Ave.)

Chip Material	Emitting Color	Lens Color
InGaN/ SiC	Ultra Blue	Water Clear

TÜV CERT ISO 9001:2000 Certificate : 04100 21209

Electro-Optical Characteristics (Ta=25˚C)

Parameter	Symbol	Min.	Typ.	Max.	Unit	Test Condition
Luminous Intensity (1)	Φv	3.8	10		lm	I_F = 350mA
Viewing Angle (2)	2θ 1/2		60		Deg.	
Dominant Wavelength (3)	λd	465		470	nm	
Spectrum Radiation Bandwidth	Δλ		23		nm	
Forward Voltage (3)	V_F	3.0	3.3	3.8	V	

(1) Luminous flux measurement tolerance is ±10%

(2) Viewing Angle is defined as the off-axis angle where the Luminous Intensity is 1/2 the peak intensity.

(3) Wavelength measurement tolerance is ±5nm.

(4) Forward Voltage measurement tolerance is ±0.1V

Absolute Maximum Ratings (Ta=25˚C)

Parameter	Symbol	Max.	Unit
Power Dissipation	P_D	2.25	W
DC Forward Current	I_F	500	mA
Operation Temperature Range	T_{opr}	-40 ~ +100	˚C
Storage Temperature Range	T_{stg}	-40 ~ +100	˚C
Junction Temperature	T_j	135	˚C
Junction to Heat-sink Thermal Resistance	R_{th}	15	K/W
Soldering Temperature Range *	T_{sol}	250˚C for 3 Seconds(Max.)	Deg.

* Recommend a secondary heatsink is used

Typical Electro-Optical Characteristics Curves

Forward Voltage vs Forward Current, $T_{Ambient} = 25^{\circ}$ C

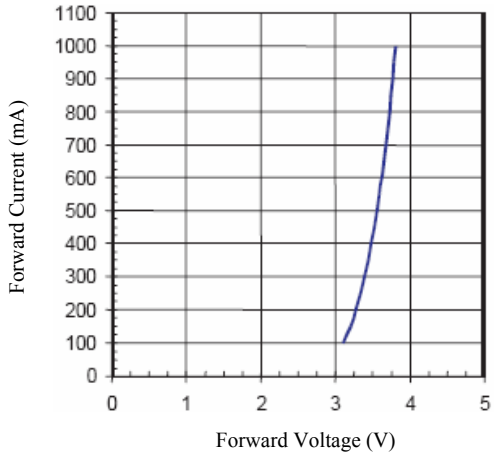

Forward Current VS Ambient Temperature

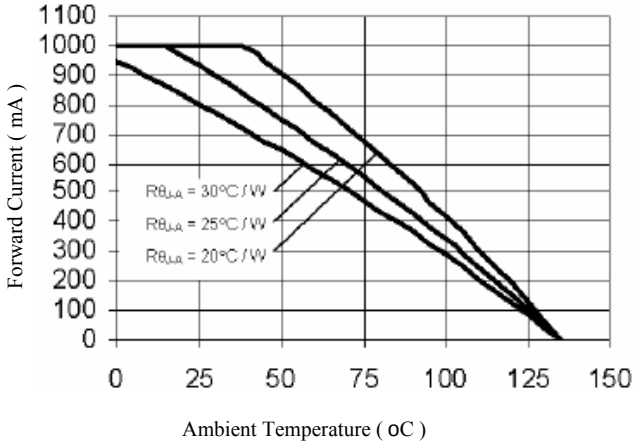

Spectrum Distribution

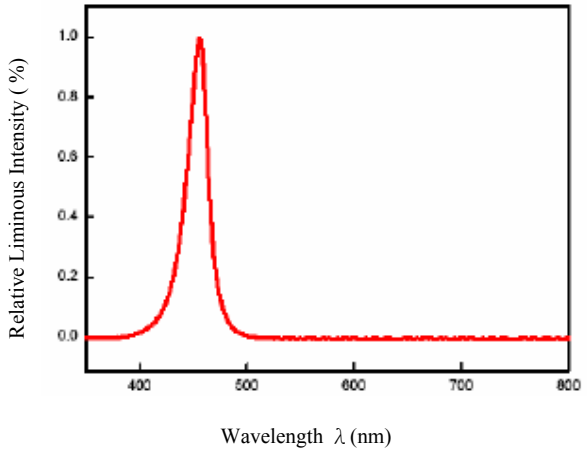

Luminous Intensity VS Forward Current

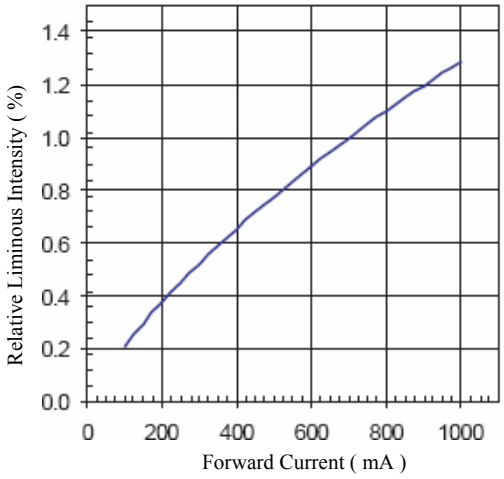
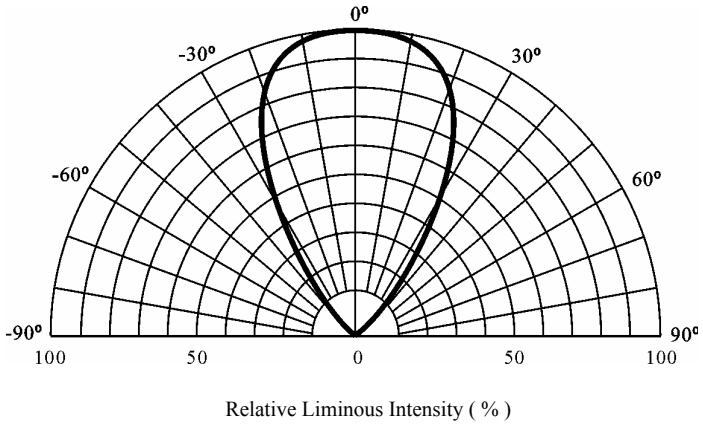
Viewing Angle Diagram